[Federal Register Volume 76, Number 218 (Thursday, November 10, 2011)]
[Rules and Regulations]
[Pages 70046-70051]
From the Federal Register Online via the Government Printing Office [www.gpo.gov]
[FR Doc No: 2011-27774]

DEPARTMENT OF TRANSPORTATION

Federal Aviation Administration

14 CFR Part 39

[Docket No. FAA-2011-1158; Directorate Identifier 2010-SW-018-AD; Amendment 39-16847; AD 2011-22-05]

RIN 2120-AA64

Airworthiness Directives; Eurocopter France Model AS350B, B1, B2, B3, BA, C, D, and D1; and AS355E, F, F1, F2, N, and NP Helicopters

AGENCY: Federal Aviation Administration (FAA), DOT.

ACTION: Final rule; request for comments.

SUMMARY: This amendment supersedes an existing airworthiness directive (AD) for the Eurocopter France (Eurocopter) Model AS350B, B1, B2, B3, BA, C, D, and D1 helicopters; and Model AS355E, F, F1, F2, and N helicopters with certain tail rotor pitch control rods installed. That AD requires a daily check of the tail rotor (T/R) pitch control rod (control rod) outboard spherical bearing (bearing) for play. If play exists, that AD requires measuring the bearing's radial and axial play. Since that AD was issued, an incident occurred where the pilot of a Model AS350 helicopter felt vibrations in the anti-torque pedal in flight, resulting in a precautionary landing. An investigation determined that the control rod showed extensive wear on the ball-joint. This superseding AD maintains the requirements of the existing AD, and expands the applicability to include the Model AS355NP helicopter and additional part-numbered control rods. The actions specified by this AD are intended to prevent failure of a control rod, loss of T/R control, and subsequent loss of control of the helicopter.

DATES: Effective November 25, 2011.

Comments for inclusion in the Rules Docket must be received on or before January 9, 2012.

ADDRESSES: Use one of the following addresses to submit comments on this AD:

- Federal eRulemaking Portal: Go to http://www.regulations.gov. Follow the instructions for submitting comments.
- Fax: (202) 493-2251.
- Mail: U.S. Department of Transportation, Docket Operations, M-30, West Building Ground Floor, Room W12-140, 1200 New Jersey Avenue SE., Washington, DC 20590.

- Hand Delivery: U.S. Department of Transportation, Docket Operations, M-30, West Building Ground Floor, Room W12-140, 1200 New Jersey Avenue SE., Washington, DC 20590, between 9 a.m. and 5 p.m., Monday through Friday, except Federal holidays.

You may get the service information identified in this AD from American Eurocopter Corporation, 2701 N. Forum Drive, Grand Prairie, TX 75052, telephone (972) 641-0000 or (800) 232-0323, fax (972) 641-3775, or at http://www.eurocopter.com/techpub.

Examining the Docket: You may examine the docket that contains the AD, any comments, and other information on the Internet at http://www.regulations.gov, or in person at the Docket Operations office between 9 a.m. and 5 p.m., Monday through Friday, except Federal holidays. The Docket Operations office (telephone (800) 647-5527) is located in Room W12-140 on the ground floor of the West Building at the street address stated in the ADDRESSES section. Comments will be available in the AD docket shortly after receipt.

FOR FURTHER INFORMATION CONTACT: Jim Grigg, Manager, FAA, Rotorcraft Directorate, Safety Management Group, 2601 Meacham Blvd., Fort Worth, TX 76137, telephone (817) 222-5126, fax (817) 222-5961.

SUPPLEMENTARY INFORMATION:

Discussion

On October 22, 2003, the FAA issued AD 2003-22-06, Amendment 39-13354 (68 FR 61608, October 29, 2003), Docket 2000-SW-12-AD (AD 2003-22-06), for Eurocopter Model AS350B, B1, B2, B3, BA, C, D, and D1; and Model AS355E, F, F1, F2, and N helicopters with control rods, part-number (P/N) 350A33-2145-00 or 350A33-2145-01, which superseded AD 98-24-35, Amendment 39-10921 (63 FR 66418, December 2, 1998), Docket 98-SW-41-AD, issued November 19, 1998 (AD 98-24-35). AD 98-24-35 required a recurring inspection to measure the control rod bearing for radial and axial play. That action was prompted by an accident and separate incident involving Model AS350B2 helicopters, and investigations revealed a broken control rod on the helicopter that was involved in the accident, and a severely worn control rod on the helicopter involved in the incident. There were two other unconfirmed incidents cited by the National Transportation Safety Board (based on the manufacturer's reports) involving the same control rod, P/N 350A33-2145-01. AD 2003-22-06 superseded AD 98-24-35, and requires a daily check of the control rod bearing, allows a larger axial play limit, and requires a more frequent inspection interval once play is found in the control rod bearing during a daily check. AD 2003-22-06 also added the Eurocopter Model AS350B3 helicopter and another part-numbered control rod to the applicability. AD 2003-22-06 was prompted by a review of additional service information and public comments regarding the requirements of AD 98-24-35. The actions specified by AD 2003-22-06 are intended to prevent separation of the bearing ball from its outer race, rubbing of the body of the control rod against the tail rotor blade pitch horn clevis, failure of a control rod, loss of T/R control, and subsequent loss of control of the helicopter.

Actions Since Issuing Previous AD

Since issuing AD 2003-22-06 (68 FR 61608, October 29, 2003), the European Aviation Safety Agency (EASA), which is the Technical Agent for the Member States of the European Union, has issued EASA AD No. 2010-0006, dated January 7, 2010, to correct an unsafe condition for the Eurocopter Model AS350B, B1, B2, B3, BA, BB, and D helicopters; and Model AS355E, F, F1, F2, and N, and NP helicopters with control rods, P/N 350A33-2100-00, -01, -02, -03, or -04; P/N 350A33-2121-00, -01, or -02; P/N 350A33-2143-00; or P/N 350A33-2145-00 or -01. EASA advises that a pilot of a Eurocopter Model AS350 helicopter felt slight vibrations in the pedal unit in flight. A few minutes later, the vibration level increased and the pilot carried out a precautionary autorotation landing. After landing, it was discovered that one TR pitch-change link was damaged, the tailboom

cone was missing, and there was an impact mark on the tailboom. Further investigation revealed the affected TR pitch-change link showed extensive wear on the ball-joint. EASA advises that this condition, if not detected and corrected, could lead to loss of the anti-torque function and possible loss of control of the helicopter.

In addition, after further review of the language used to describe the unsafe condition addressed in AD 2003-22-06 (68 FR 61608, October 29, 2003), it has been determined that changes are needed in terminology to more accurately describe the unsafe condition that this AD is intending to correct.

Related Service Information

Eurocopter has issued Alert Service Bulletin (ASB) No. 05.00.60 for the Model AS350 series helicopters, and ASB No. 05.00.56 for the Model AS355 series helicopters, both dated December 9, 2009. These ASBs specify performing an initial and recurring check for play in the pitch-change links. If axial play in the ball-joint is detectable, the ASBs specify removing the pitch-change link and measuring the bearing wear using a dial indicator. The EASA classified these ASBs as mandatory and issued EASA AD No. 2010-0006 to ensure the continued airworthiness of these helicopters.

FAA's Determination and Requirements of This AD

These helicopters have been approved by the aviation authority of France and are approved for operation in the United States. Pursuant to our bilateral agreement with France, EASA, their technical representative, has notified us of the unsafe condition described in the EASA AD. We are issuing this AD because we evaluated all information provided by EASA and determined the unsafe condition exists and is likely to exist or develop on other helicopters of these same type designs. Therefore, this AD is being issued to prevent failure of a control rod, loss of tail rotor control, and subsequent loss of control of the helicopter. This AD requires the following actions:

- Before the first flight of each day, check the control rod bearing for play on the helicopter, by observation and feel, by slightly moving the TR blade in the flapping axis while monitoring the bearing for movement. This action may be performed by an owner/operator (pilot) holding at least a private pilot certificate, and must be entered into the helicopter maintenance records in accordance with 14 CFR 43.9(a)(1)-(4) and 91.417(a)(2)(v). A pilot may perform this check because it involves only a visual and physical check of the control rod for play, and can be performed equally well by a pilot or a mechanic. If play is detected, a mechanic must remove the control rod from the helicopter, and using a dial indicator, measure the control rod bearing wear. If the radial play exceeds 0.008 inch or axial play exceeds 0.016 inch, the control rod must be replaced with an airworthy control rod before further flight.
- Thereafter, at recurring intervals not to exceed 30 hours time-in-service (TIS), remove the control rod and measure the bearing wear using a dial indicator. If the radial play exceeds 0.008 inch or axial play exceeds 0.016 inch, replace the control rod with an airworthy control rod before further flight.

The short compliance time involved, before the first flight of each day, is required because the previously described critical unsafe condition can adversely affect the controllability of the helicopter. Therefore, this AD must be issued immediately. Since a situation exists that requires the immediate adoption of this regulation, it is found that notice and opportunity for prior public comment hereon are impracticable, and that good cause exists for making this amendment effective in less than 30 days.

Differences Between This AD and the EASA AD

This AD differs from the EASA AD as follows:

- This AD includes the Model AS350C and AS350D1 helicopters, as they may have the same control rod; this AD does not include the Model AS350BB because it does not have an FAA-issued type certificate.
- This AD uses the term "T/R pitch control rod" and the EASA AD uses the term "T/R pitch change link" to describe the same part.
- This AD uses the term "loss of T/R control" to describe the unsafe condition, and the EASA AD uses the term "loss of anti-torque control."
- This AD uses the term "hours TIS" to describe compliance times, and the EASA AD uses the term "flight hours."
- This AD requires either a pilot/operator or mechanic, before the first flight of each day, to perform a check or inspection of the bearing for play. If play is found, a mechanic must, before further flight, measure the bearing play, and thereafter measure the bearing play at intervals not to exceed 30 hours TIS. The EASA AD requires a mechanic, within 30 flight hours, to perform an initial inspection to measure the bearing play, and thereafter, at intervals not to exceed 30 flight hours. The EASA AD does not require a daily check.

Costs of Compliance

We estimate that this AD will affect about 733 helicopters of U.S. registry. We estimate, per helicopter, it will take minimal work-hours to do the daily check, 1 work-hour to do the recurring inspection, and 1 work-hour to replace 1 control rod. The average labor rate is $85 per work-hour. Required parts will cost about $1,724 to replace a control rod per helicopter. Based on these figures, we estimate the cost of this AD on U.S. operators is $1,949,047 per year, assuming 10 recurring inspections per year per helicopter, and assuming 1 control rod is replaced per year per helicopter.

Comments Invited

This AD is a final rule that involves requirements that affect flight safety and was not preceded by notice and an opportunity for public comment; however, we invite you to submit any written data, views, or arguments regarding this AD. Send your comments to an address listed under ADDRESSES. Include "Docket No. FAA-2011-1158; Directorate Identifier 2010-SW-018-AD" at the beginning of your comments. We specifically invite comments on the overall regulatory, economic, environmental, and energy aspects of this AD. We will consider all comments received by the closing date and may amend this AD because of those comments.

We will post all comments we receive, without change, to http://www.regulations.gov, including any personal information you provide. We will also post a report summarizing each substantive verbal contact with FAA personnel concerning this AD. Using the search function of the docket Web site, you can find and read the comments to any of our dockets, including the name of the individual who sent the comment. You may review the DOT's complete Privacy Act Statement in the Federal Register published on April 11, 2000 (65 FR 19476).

Regulatory Findings

We have determined that this AD will not have federalism implications under Executive Order 13132. This AD will not have a substantial direct effect on the States, on the relationship between the national Government and the States, or on the distribution of power and responsibilities among the various levels of government.

For the reasons discussed above, I certify that the regulation:

1. Is not a "significant regulatory action" under Executive Order 12866;

2. Is not a "significant rule" under the DOT Regulatory Policies and Procedures (44 FR 11034, February 26, 1979);

3. Will not affect intrastate aviation in Alaska to the extent that it justifies making a regulatory distinction; and

4. Will not have a significant economic impact, positive or negative, on a substantial number of small entities under the criteria of the Regulatory Flexibility Act.

We prepared an economic evaluation of the estimated costs to comply with this AD. See the AD docket to examine the economic evaluation.

Authority for This Rulemaking

Title 49 of the United States Code specifies the FAA's authority to issue rules on aviation safety. Subtitle I, Section 106, describes the authority of the FAA Administrator. Subtitle VII, Aviation Programs, describes in more detail the scope of the Agency's authority.

We are issuing this rulemaking under the authority described in Subtitle VII, Part A, Subpart III, Section 44701, "General requirements." Under that section, Congress charges the FAA with promoting safe flight of civil aircraft in air commerce by prescribing regulations for practices, methods, and procedures the Administrator finds necessary for safety in air commerce. This regulation is within the scope of that authority because it addresses an unsafe condition that is likely to exist or develop on products identified in this rulemaking action.

List of Subjects in 14 CFR Part 39

Air transportation, Aircraft, Aviation safety, Incorporation by reference, Safety.

Adoption of the Amendment

Accordingly, under the authority delegated to me by the Administrator, the FAA amends 14 CFR part 39 as follows:

PART 39–AIRWORTHINESS DIRECTIVES

1. The authority citation for part 39 continues to read as follows:

Authority: 49 U.S.C. 106(g), 40113, 44701.

§ 39.13 [Amended]

2. The FAA amends § 39.13 by removing Amendment 39-13354 (68 FR 61608; October 29, 2003), and adding the following new Airworthiness Directive (AD):

2011-22-05 EUROCOPTER FRANCE (EUROCOPTER): Amendment 39-16847; Docket No. FAA-2011-1158; Directorate Identifier 2010-SW-018-AD; supersedes AD 2003-22-06, issued October 22, 2003 (68 FR 61608; October 29, 2003), Amendment 39-13354, Docket No. 2000-SW-12-AD.

Applicability: Eurocopter Model AS350B, B1, B2, B3, BA, C, D, D1; and Model AS355E, F, F1, F2, N, and NP helicopters; with tail rotor (T/R) pitch control rod (control rod), part number (P/N) 350A33-2100-00, -01, -02, -03, -04; P/N 350A33-2121-00, -01, -02; P/N 350A33-2143-00; or P/N 350A33-2145-00 or -01, installed; certificated in any category.

Compliance: Required as indicated.

To prevent failure of a T/R control rod, loss of T/R control, and subsequent loss of control of the helicopter, accomplish the following:

(a) Before the first flight of each day, place the T/R pedals in the neutral position. If the helicopter is fitted with a T/R load compensator, discharge the accumulator as described in the rotorcraft flight manual. Check the control rod bearing (bearing) for play on the helicopter, by observation and feel, by slightly moving the T/R blade in the flapping axis while monitoring the bearing for movement. See the following Figure 1 of this AD. The actions required by this paragraph may be performed by the owner/operator (pilot) holding at least a private pilot certificate, and must be entered into the helicopter maintenance records showing compliance with this AD in accordance with 14 CFR 43.9(a)(1)-(4) and 14 CFR 91.417(a)(2)(v). The record must be maintained as required by 14 CFR 91.173, 121.380, or 135.439.

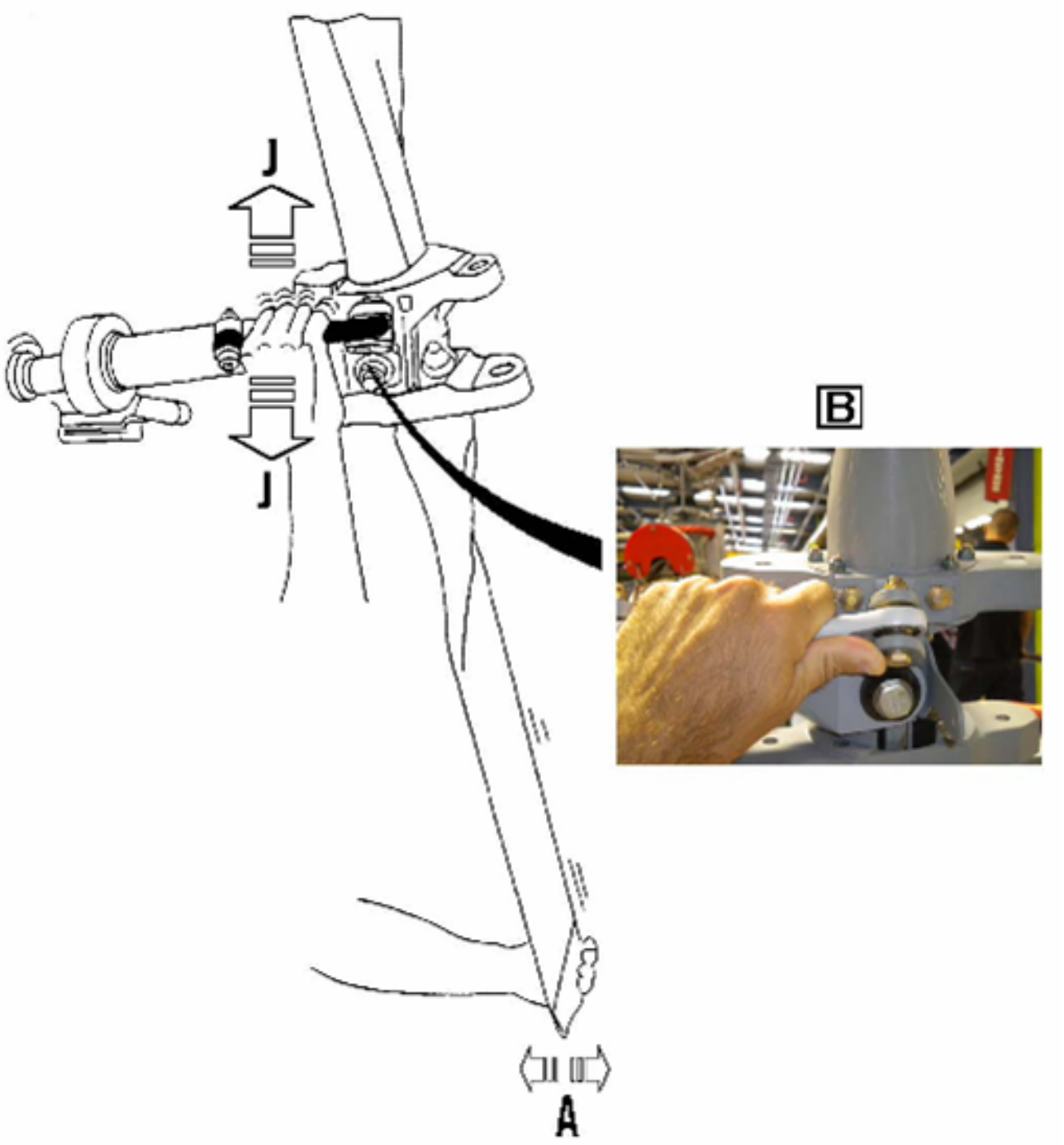

Figure 1: Manual Check for Play of the Tail Rotor Pitch Control Rod

(b) If the Teflon cloth is coming out of its normal position within the bearing, totally or partially, or if there is discoloration or scoring on the bearing, before further flight, replace the control rod with an airworthy control rod.

(c) If a pilot or mechanic detects play, a mechanic must remove the control rod from the helicopter, and using a dial indicator, measure the bearing wear according to the following and as shown in Figures 2 and 3 of this AD:

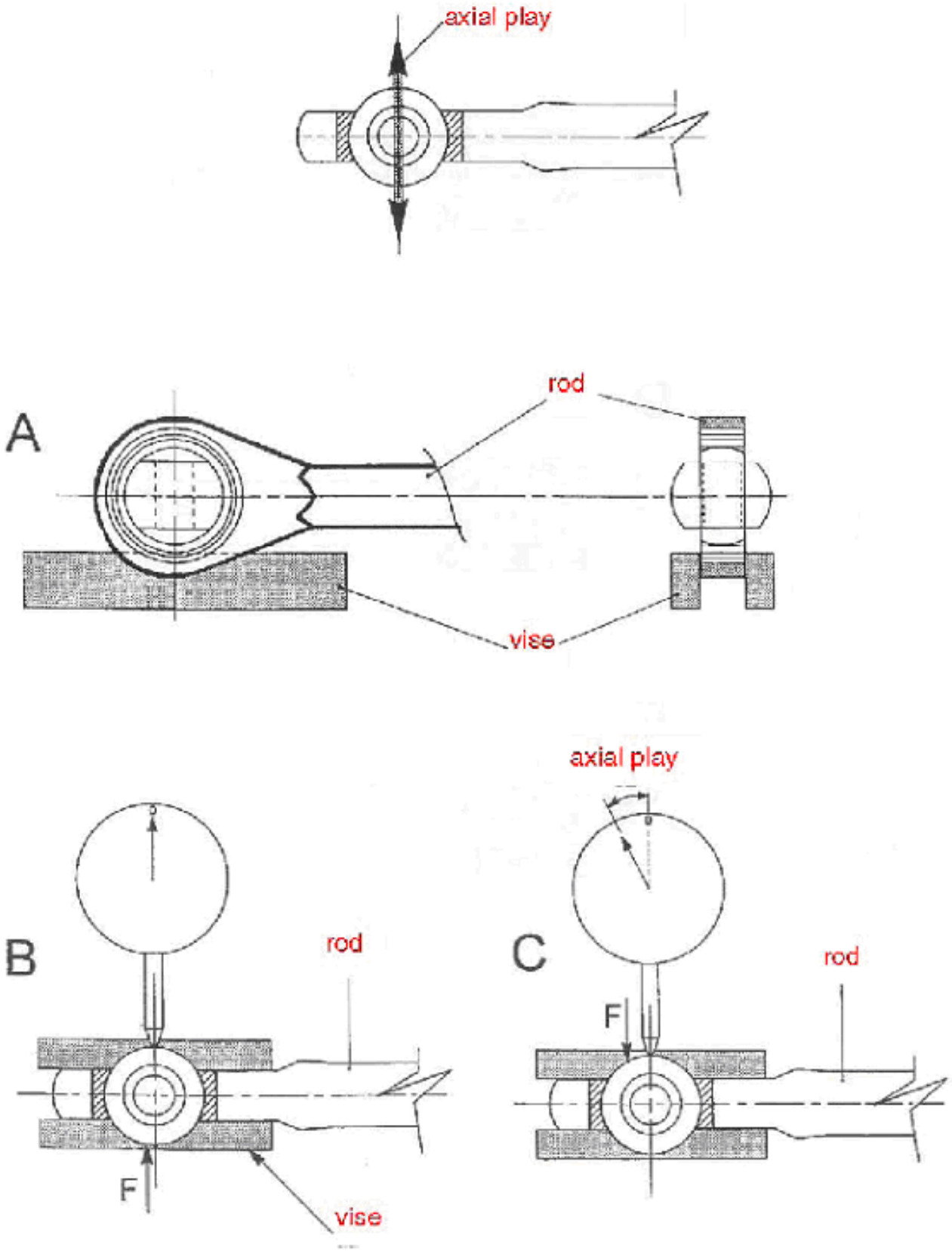

Figure 2: Measurement of the Axial Play (A) of the Bearing

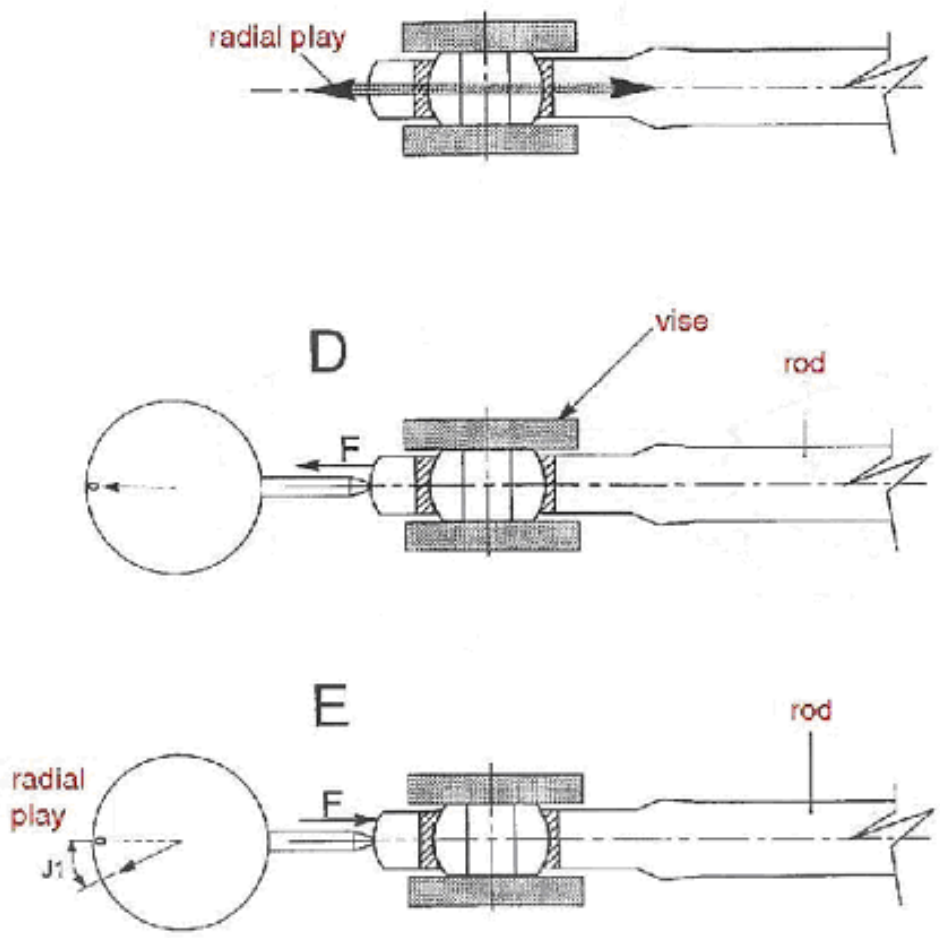

Figure 3: Measurement of the Radial Play (R) of the Bearing

(1) Remove the control rod from the helicopter.

(2) Mount the control rod in a vise as shown in Figure 2 of this AD.

(3) Using a dial indicator, take axial play readings by moving the spherical bearing in the direction F (up and down) as shown in Figure 2 of this AD.

(4) Install a bolt through the bearing and secure it with a washer and nut to provide a clamping surface when the bearing is clamped in a vise.

(5) Mount the control rod and bearing in a vise as shown in Figure 3 of this AD.

(6) Using a dial indicator, take radial play measurements by moving the control rod in the direction F as shown in Figure 3 of this AD.

(7) Record the hours of operation on each control rod.

(8) If the radial play exceeds 0.008 inch or axial play exceeds 0.016 inch, replace the control rod with an airworthy control rod before further flight.

(9) If the radial and axial play are within limits, reinstall the control rod.

(10) Thereafter, at intervals not to exceed 30 hours time-in-service, remove the control rod and measure the bearing play with a dial indicator in accordance with paragraph (c) of this AD.

(d) To request a different method of compliance or a different compliance time for this AD, follow the procedures in 14 CFR 39.19. Contact the Manager, Safety Management Group, DOT/FAA, ATTN: Jim Grigg, Manager, Rotorcraft Directorate, 2601 Meacham Blvd., Fort Worth, TX 76137, telephone (817) 222-5126, fax (817) 222-5961, for information about previously approved alternative methods of compliance.

(e) The Joint Aircraft System/Component Code is 6720: Tail rotor control system.

(f) This amendment becomes effective on November 25, 2011.

Note: The subject of this AD is addressed in European Aviation Safety Agency (France) AD No. 2010-0006, dated January 7, 2010.

Issued in Fort Worth, Texas, on October 12, 2011.
Lance T. Gant,
Acting Manager, Rotorcraft Directorate,
Aircraft Certification Service.